ArcelorMittal

Arval
by ArcelorMittal

Cofraplus 220

Installation Guidelines

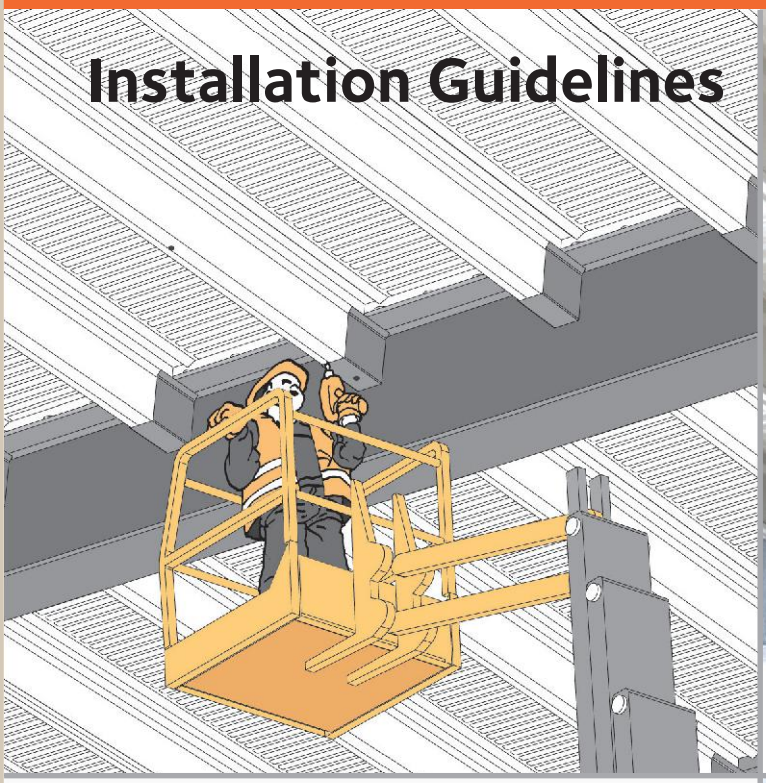

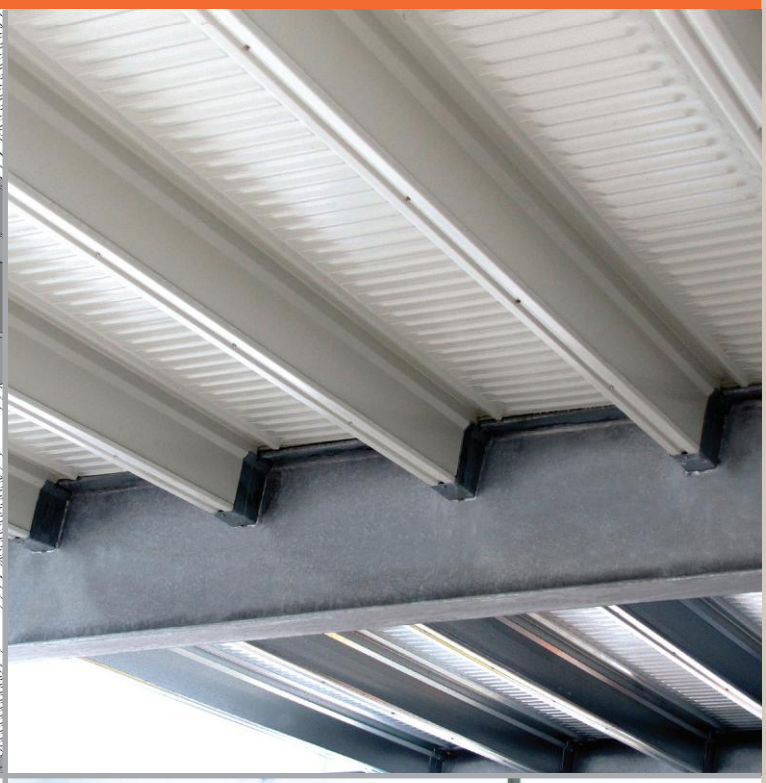

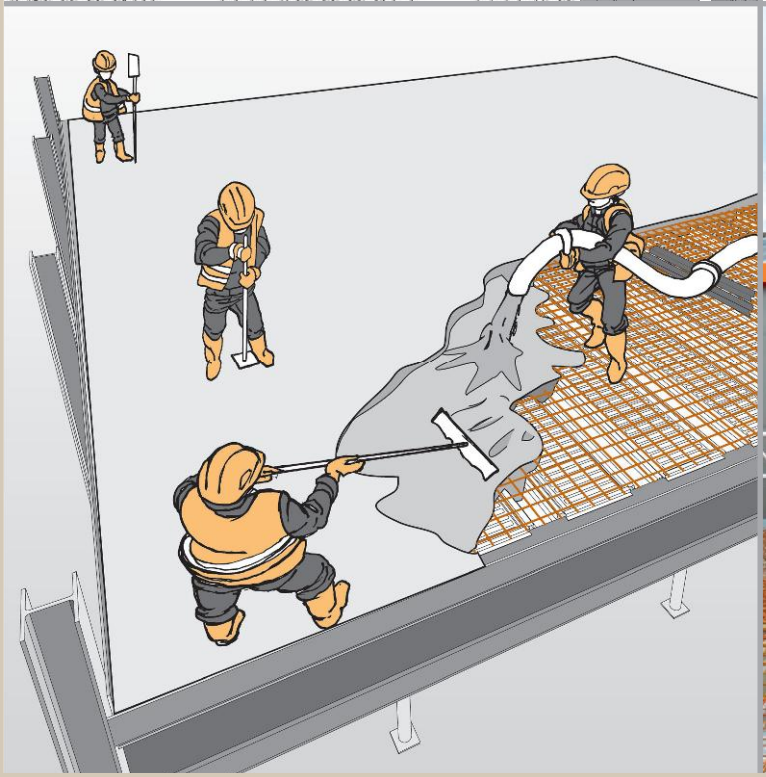

Types of application

Wing system

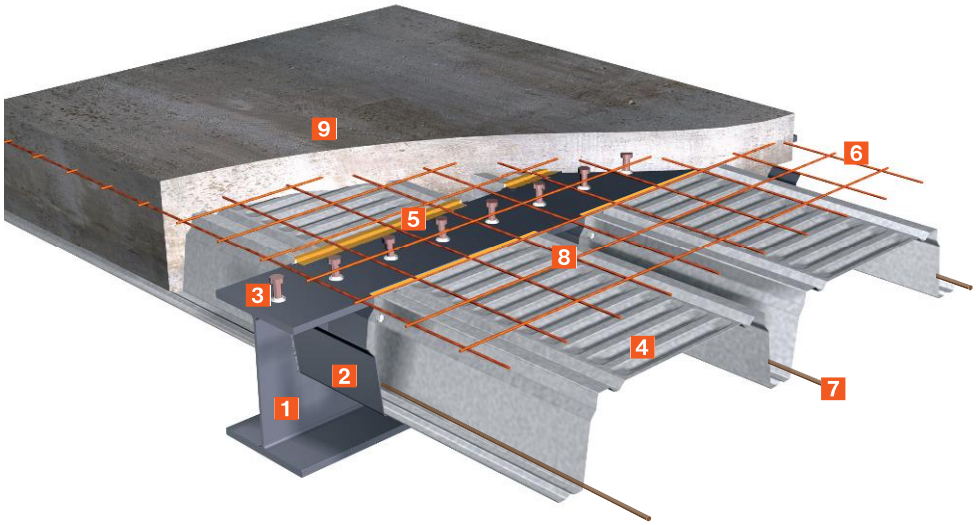

1 Hot rolled steel beam
2 "Wing" - welded to the web of the beam as support for the Cofraplus 220 profile
3 Shear stud connector ensuring composite action of the beam
4 Cofraplus 220 profile sheet
5 Z-profile to close the gap between profile sheet & upper flange
6 General reinforcement - Anti-cracking mesh
7 Reinforcement in the rib
8 Reinforcement at the support
9 In-situ concrete

Slimfloor system

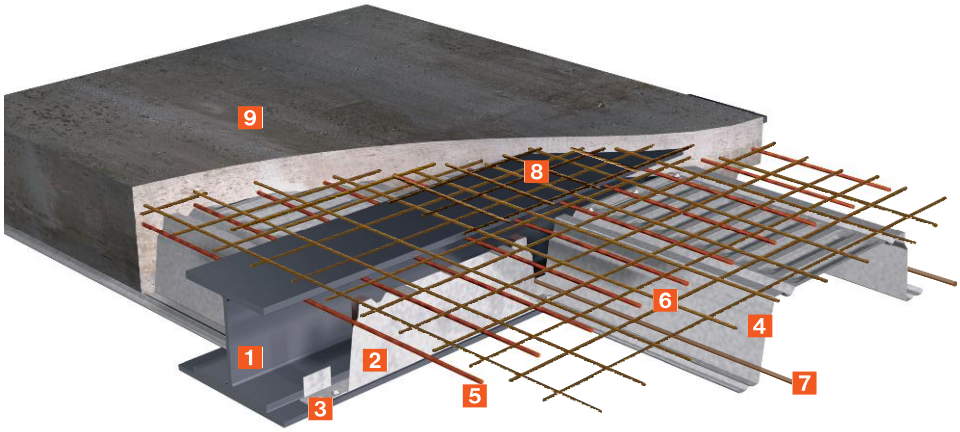

1 Slim floor beam – based on standard section with a wide plate welded to the bottom flange
2 Supporting diaphragm devoted to close the end of the profile and to support its upper flange
3 Fixing of the supporting diaphragm
4 Cofraplus 220 profile sheet
5 Optional: concrete dowel a cross the web of the beam (CoSFB*)
6 General mesh reinforcement - Anti-cracking mesh
7 Reinforcement in the rib
8 Reinforcement at the support
9 In-situ concrete

* Composite slim floor beam

1. Installation of steel sheets

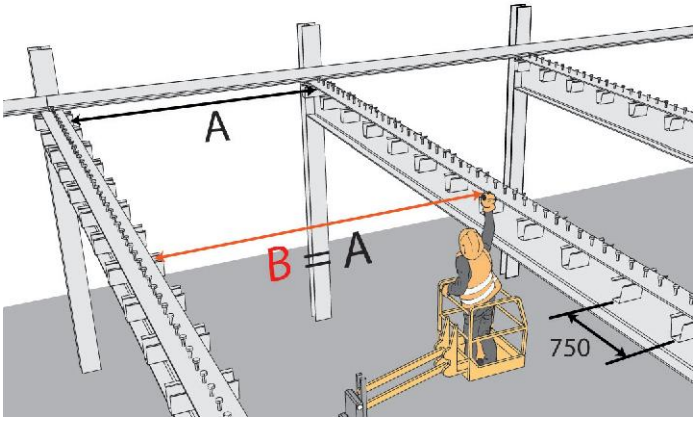

1.1 Check dimensions of the structure :

> Constant beams distance : B = A

> Length of the profile sheets :
L = A - 20mm (allowance for clearance)

> Resistance against lateral torsional buckling (LTB)

Wing-system

> Centre distance of wings : 750mm

> Projections of wings : 60mm
referring to the upper flange of the beam in order to ensure a minimum support width of 50mm for the Cofraplus 220 sheet.

Slim floor system with supporting diaphragm

> Support width > 50mm

Wing-system

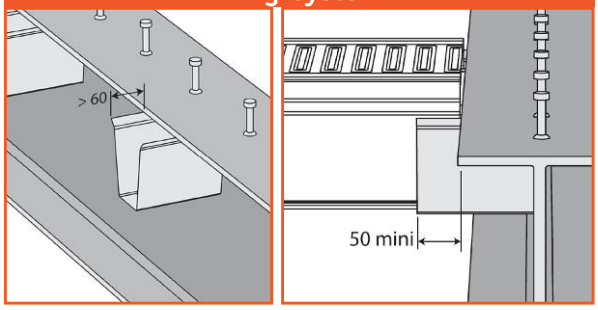

Slim floor-system

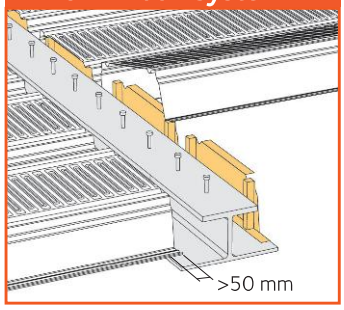

Length of the profile sheets

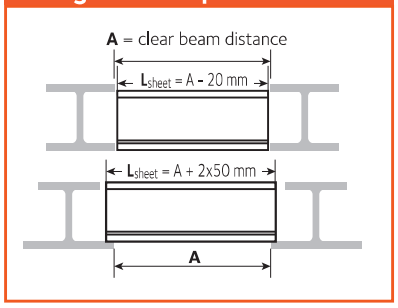

1.2 Laying of Cofraplus 220 profile sheets

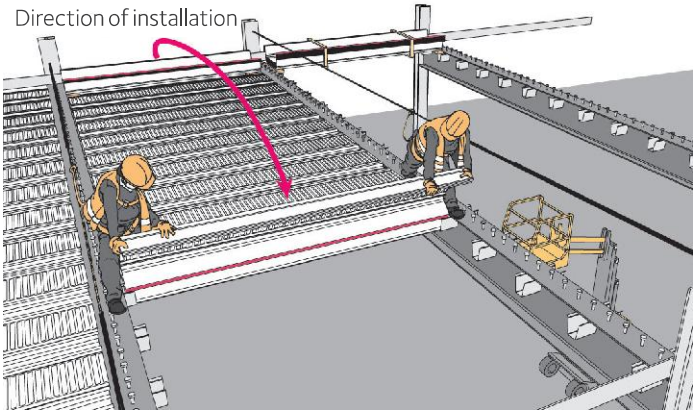

> **Follow any safety instructions on the site and in particular those relating to working at height !**

> Put down the bundles of Cofraplus220 on square timber laying on 2 wings
(not more than 30 sheets per bundle)
Position the bundles with the indication « small side » towards the Direction of installation.

> In case of high aesthetic requirements or to reduce efforts for cleaning, apply sealing strips to the ribs before installation to ensure a better tightness during the concreting.

> Comply with the minimum support width of 50mm for the Cofraplus profile sheet
- on wings

or
- on the bottom flange for slim-floor

«small side»

Put down the bundles

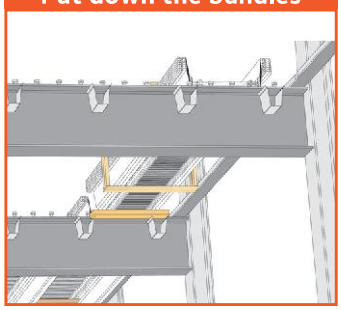

2. Fastening

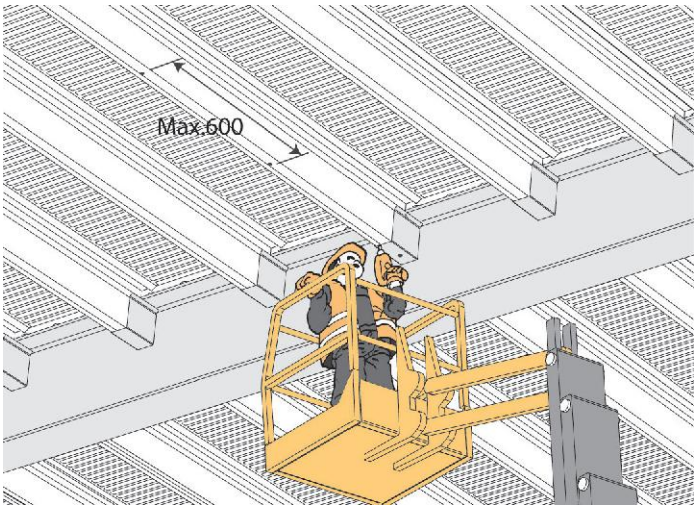

2.1 Longitudinal stitching of overlapping joint at the bottom of the rib

> Screw distance : max.600 mm

> Diameter of screws : min Ø 5,5mm

> For aesthetic reasons stitching from below is usually preferred – ensure in this case that screws are tapping both sheet profiles.

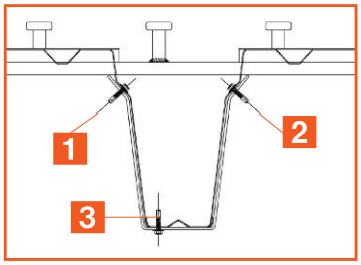

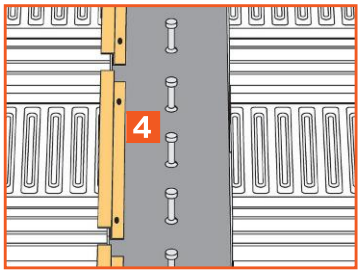

2.2 Fixing to Wings

> 3 self-taping screws per wing where 2 have to be placed into the "shoulders"
see 1, 2, 3

> Fix Z-profile to close gap between profile sheet and flange of the beam
see 4

> In case of high aesthetic requirements or to reduce the need for cleaning, apply sealing strips to the critical points while installation to ensure a better tightness during the concreting.

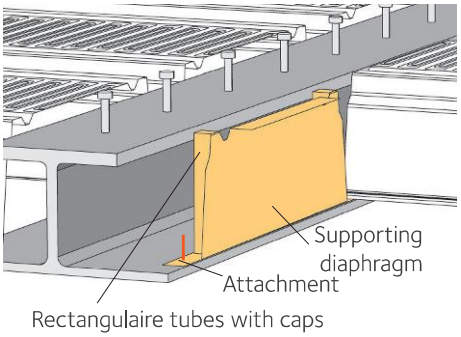

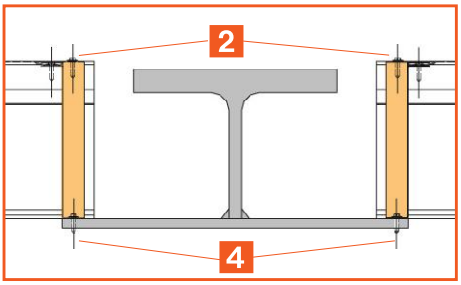

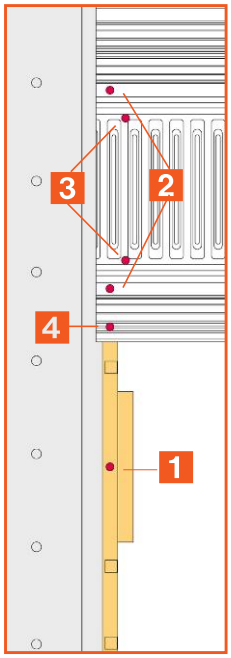

2.3 Attachment to the supporting diaphragm

> Fasten the diaphragm to the bottom flange of the IFB/SFB beam – see 1

> Lay the profile sheets Cofraplus 220 onto the supporting diaphragm.

> Screw the profile sheet onto the cap of the rectangular tube 2 , its upper flange to the upper splay of the diaphragm 3 and in the bottom of the rib to the bottom flange of the beam 4

> Use sealing strip if necessary.

3. Reinforcement & concreting

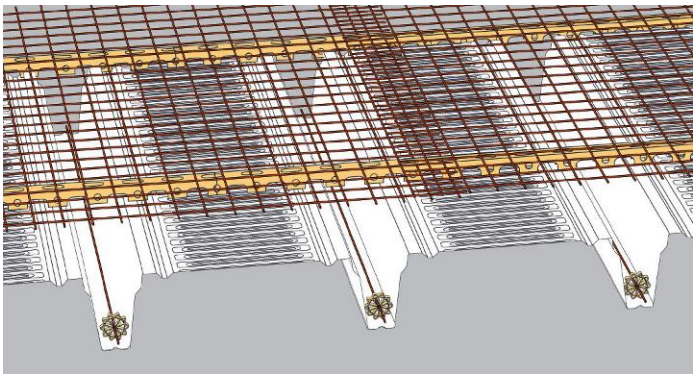

3.1 Laying of reinforcement mesh & bars

> Ensure sufficient concrete cover by suitable spacers in sufficient number.

> Distribute the spacers avoiding any load concentration while walking and working on the reinforcement meshes.

> Comply with the overlap of reinforcements and their anchorage lengths.

3.2 Pouring in-situ concrete

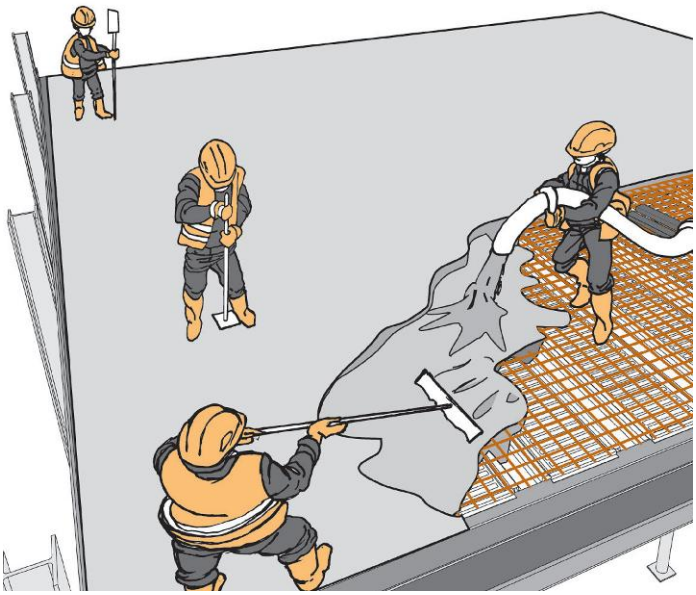

> **Avoid any load concentration and all accumulation of concrete.**

> Fill-up firstly the ribs before loading the upper flange of the sheet.

> Check slab thickness globally with laser level and locally using a mandrel in order to identify and take into account the ponding effect and deflection of the main structural elements.

> Comply with the construction loads and therelated working areas considered in the design notes.

> Preferable consistency of the fresh concrete S3 to S4.

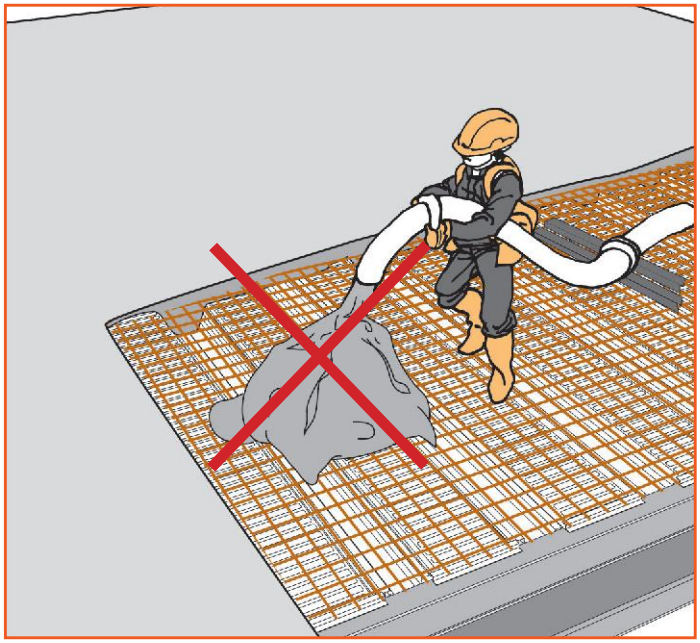

> Ensure proper filling of support zones including supporting diaphragm or wings by correct compacting of the concrete.

4. Subsequent works

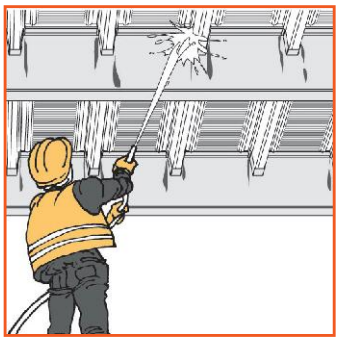

4.1 Surface treatment

> **Immediately clean underside from eventual concrete and cement slurry by a simple water jet or if necessary by brush.**

> In case of high aesthetic requirements see 1.2 and 2.2.

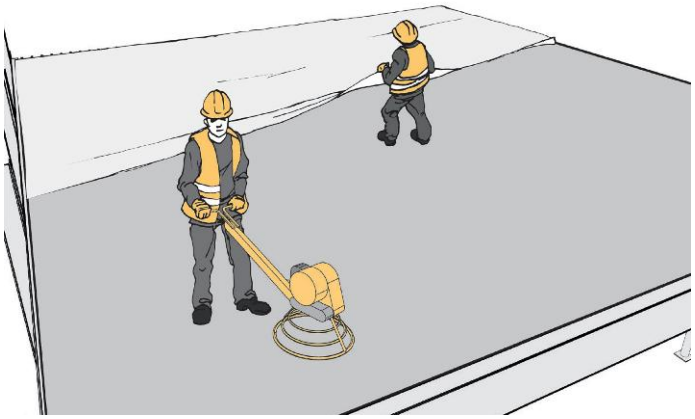

4.2 Post treatment of the fresh concrete

> Post treatment of the concrete should be carried out according to climate conditions in order to avoid superficial cracks.

> The load of any machinery for the treatment should be taken into account for consideration in the construction phase design.

> Treat any eventual cracks and protect the concrete surface, if necessary, following current technical specifications.

5. Special case: temporary propping (if necessary)

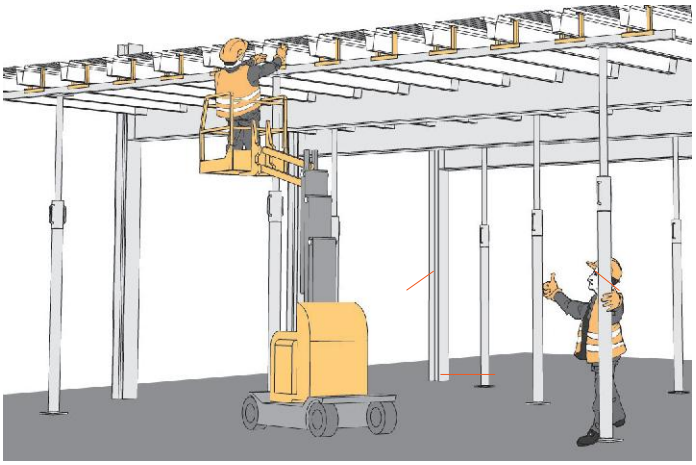

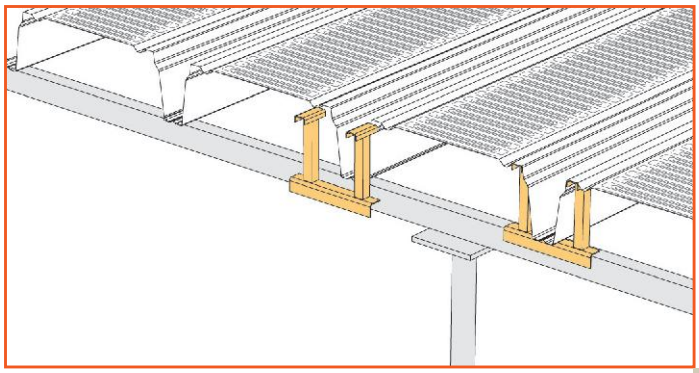

5.1 Propping of Cofraplus 220 profile sheets

> Use the "propping devices for Cofraplus 220 profile sheets".

> Install props before any loading of the profile sheets Cofraplus 220.

> Distribute the props regularly along the span of the profile sheet.

> Make sure that each rib gets propped.

> Check load bearing capacity of the jacks and the props as well as their bearing points.

> Prop any eventual cantilever of the profile sheet.

6. Additional information

Geometry, dimensions and weight

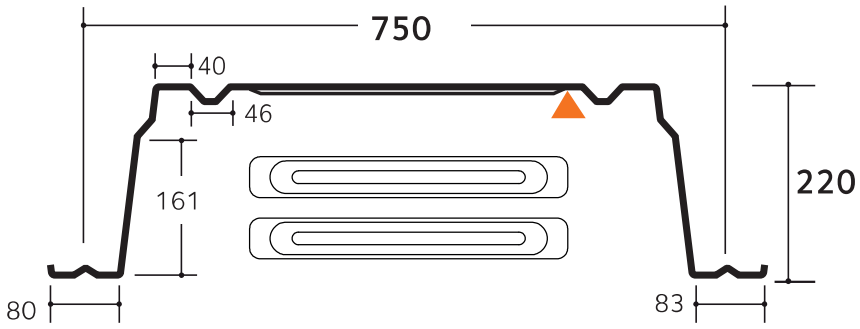

▲Prepainted face

total width b_p [mm]	*height* h_p [mm]	*cover width* b_r [mm]	*thickness* t_{nom} [mm]	*self weight* g_p [kg/m²]	*linear weight* [kg/ml]
817	220	750	1,00	13,1	9,8
			1,13	14,8	11,1
			1,25	16,4	12,3

Pre-design in construction stage

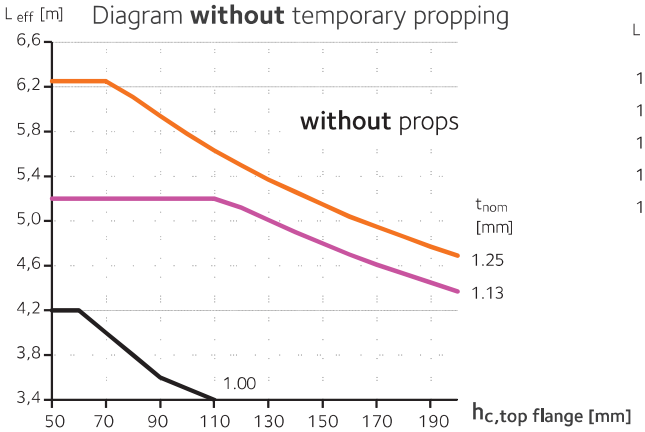

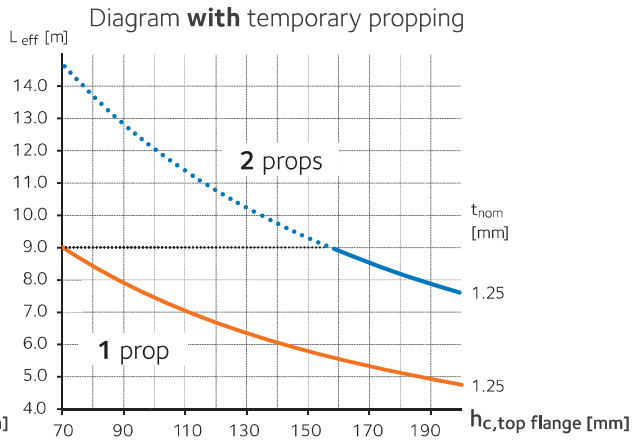

L_{eff} : *Span in construction stage - distance between bearing points.*

h_1 : *Concrete thickness above the upper flange of the Cofraplus 220 profile.*

t_{nom} : *Nominal steel thickness of the profile sheet.*

Concrete volume for normal cross section

$h_{c,top\ flange}$: *Concrete thickness above the upper flange of the Cofraplus 220 profile in [mm]*

$h_{c,\ top\ flange}$	50	60	70	80	90	100	110	120	130	140	150	160	170
L/m²	87	97	107	117	127	137	147	157	167	177	187	197	207

ArcelorMittal

Austria
AMC Austria GmbH-Arval
Lothringenstraße 2
A-4501 Neuhofen an der Krems
T: +43 7227 5225
PFLAUM
Ganglgutstraße 89
A-4050 Traun
T: +43 72 29 64 584

Belgium-Belgie
ArcelorMittal Construction-Arval
Lammerdries 8
2440 Geel
T: + 32 14 56 39 43

Croatia-Hrvatska
ArcelorMittal Construction
Croatia
Bani bb
10000 Zagreb
T: +385 1 6607 532

Czech Republic- Česká Republika
ArcelorMittal Construction-Arval
CZ - 110 00 Praha 1
Biskupský dvûr 7
T: +420 272 072 019

Denmark-Danmark
ArcelorMittal Construction Denmark
c/o RC Stål Aps
Tolbodgade 8
DK-4700 Næstved
T: +45 40 68 89 87

France
ArcelorMittal Construction-Arval
16 route de la Forge
F-55000 Haironville
T: +33 3 29 79 85 85

Germany-Deutschland
ArcelorMittal Construction-Arval
AMC Deutschland GmbH
Münchener Strasse 2
D-06796 Brehna
T: +49 3 49 54 455 0

Hungary-Magyar
AMC Hungary
H-1211 Budapest
Weiss Manfréd u. 5-7
T: +36 1 350 28 76

Italy-Italia
ArcelorMittal Construction-Arval
AMDS Italia
Viale Sicilia 97
IT-20052 Monza
T: +39 039 28 12 226

Lithuania-Lietuva
ArcelorMittal Construction Baltic
Arval
Ukmerges g. 369A-602
LT-12142 Vilnius
T: +370 5 246 15 71

Netherlands-Nederland
ArcelorMittal Construction
Biezenwei 2
NL-4004 MB Tiel
T: +313 44 63 17 46

Norway-Norge
ArcelorMittal Construction-Arval
Dyrskuevelen 16
N-2040 Klifta
T: + 47 63 94 14 00

Poland-Polska
ArcelorMittal Construction-Arval
Konopnica 120
PL-96200 Rawa Mazowiecka
T: +48 46 813 28 00

Portugal
ArcelorMittal Construção-Arval
Estrada National 3 (Km 17,5)
Apartado 14
PT-2071-909 Cartaxo
T: +351 263 400 070

Romania-România
ArcelorMittal Construction-Arval
136 Biruintei Bdul, DN3 Km 14
077145 Pantelimon, Jud. Ilfov
T: +40 21 312 45 17

South Africa
ArcelorMittal Construction-Arval
The Place - 1 Sandton Drive
Sandhurst - Sandton 2196
Gauteng
T: +27 (0) 11 722 8621

Slovakia-Slovenská Republika
ArcelorMittal Construction-Arval
Rožn˘ avská 24
SK-82104 Bratislava
T: +421 2 321 326 04

Spain-España
ArcelorMittal Construcción-Arval
Carretera Guipuzcoa Km 7,5
E-31195 Berrioplano (Navarra)
T: +34 948 138 700

Sweden-Sverige
ArcelorMittal Construction
Sverige AB, Arval
Västanvindsgatan 13
SE-65221 Karlstad
T: +46 (0)54 68 83 00

Switzerland-Schweiz
ArcelorMittal Construction Suisse
SA
Industriestrasse 19
T: +41 56 296 10 10

Middle East & International
ArcelorMittal International HQ
12 C, Rue Guillaume Kroll
L-1882 Cloche d'Or
Luxembourg
T: +352 4792 1

Caribbean

Guadeloupe
ArcelorMittal Caraïbes
51 rue Henri Becquerel
ZI de Jarry
F-97122 Baie Mahault
T: +590 26 82 03

Martinique
ArcelorMittal Caraïbes
Zip de la Pointe des Grives
F-97200 Fort de France
T: +596 60 60 00

Saint Martin
ArcelorMittal Caraïbes
ZAC Lot 3 et 4 La Savane
F-97150 Saint Martin
T: +590 52 98 04

Dominican Republic
ArcelorMittal Caraïbes
Prolongacion Av. Charles de
Gaulle, 131
Dominican Republic-Santo
Domingo
T: +1 (809) 483 2790

Guyana
ArcelorMittal Caraïbes
ZI de Degrad des Cannes BP 418
F-97300 Remi-Remont-Joly
T: +594 25 52 21

Indian Ocean

Réunion
ArcelorMittal Construction
Réunion
ZIN°2-44 rue Paul Verlaine
BP 802
F-97825 Le Port
T: +262 42 42 42

Mauritius
Route de la Filature
Mauritius-Riche Terre
T: +230 248 17 05

www.arcelormittal.com/arval

Conception · illustrations EL ZOCALO **Edition n°1 Novembre 2014**