ArcelorMittal Europe - Long Products
Rails & Special Sections

ArcelorMittal

Railway Accessories

ArcelorMittal
Our Company

ArcelorMittal is the world's leading steel and mining company, with over 168,000 employees in more than 60 countries, and annual steel capacity production of 113 million tonnes.

ArcelorMittal is the leader in all major global steel markets, including automotive, construction, household appliances, packaging and rails, with leading R&D and technology, as well as sizeable captive supplies of raw materials and outstanding distribution networks. With an industrial presence in Europe, Asia, Africa and America, ArcelorMittal covers all of the key steel markets, from emerging to mature.

With production sites in Gijón (Spain), Dabrowa Górnicza and Chorzów (Poland), as well as in Rodange (Luxembourg), ArcelorMittal is part of a small group of rail manufacturers whose production has developed notably in the specialised high-speed and heavy transport sectors.

ArcelorMittal has implemented and keeps updated a quality assurance system that complies with the requirements of the international standard ISO 9001, and is certified by AENOR, the Spanish Association for Standardisation and Certification, a member of IQNet, the international network of organisations for the evaluation and certification of quality systems. ArcelorMittal Poland and ArcelorMittal Rodange are both ISO 9001 certificated.

Contents

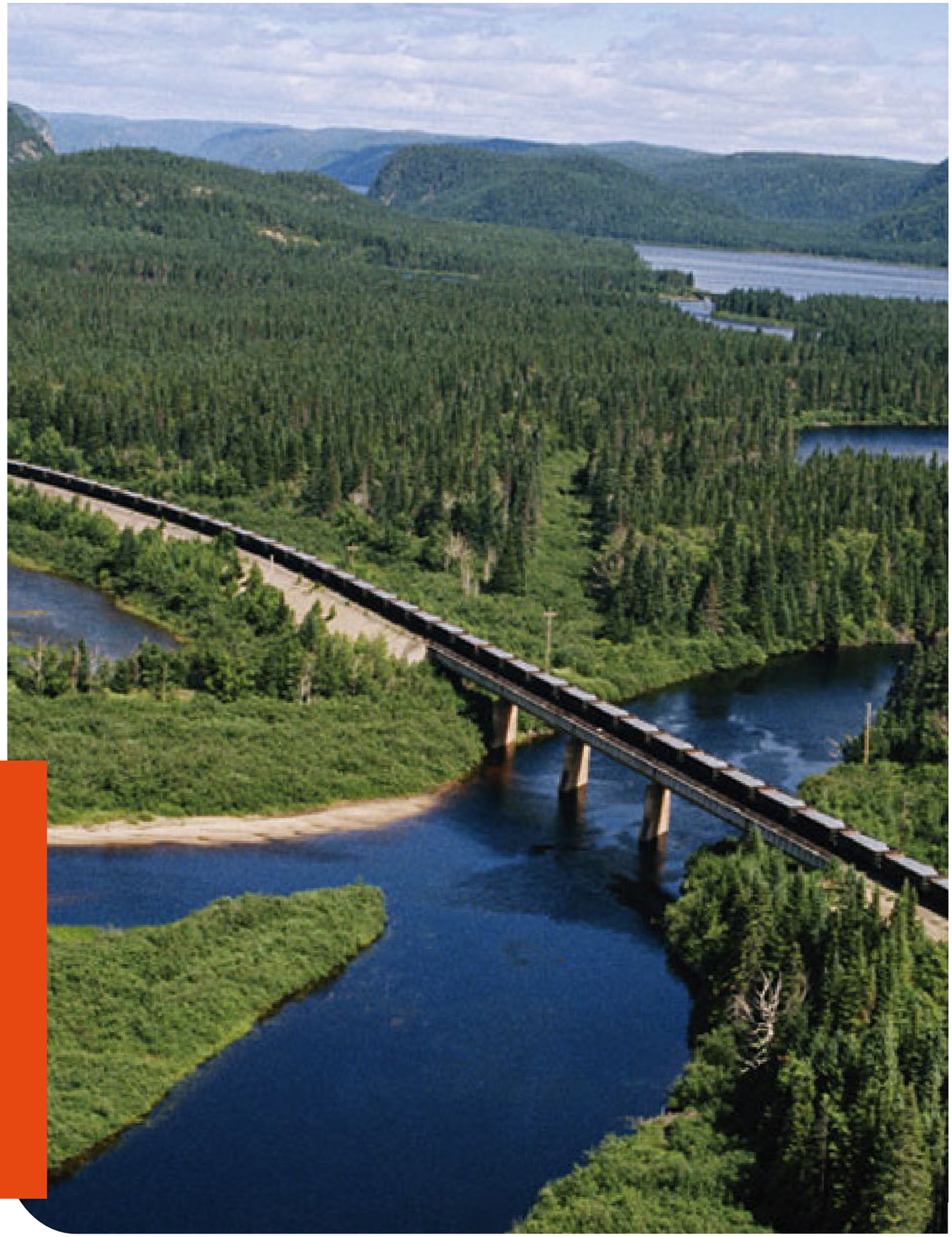

Achieving carbon-neutral steelmaking

ArcelorMittal Europe has committed to reduce CO2 emissions by 35% by 2030, with a further ambition to be carbon neutral by 2050, in line with the EU's Green Deal and the Paris Agreement.

As the leading global steel company, we are engaged in the most important challenge faced by the industry – that of producing all the steel the world needs in an environmentally sustainable way.

XCarb™ is the new brand name for ArcelorMittal's ongoing global programme of steelmaking innovation targeted at carbon-neutral steel by 2050. The initiatives that are part of XCarb™ aim to reduce the carbon footprint of ArcelorMittal and of our customers.

Our first XCarb™ products are now ready for market: XCarb™ green steel certificates, which are designed for our steel products made from iron ore, and XCarb™ recycled and renewably produced for steel products made via the electric arc furnace route using scrap steel and 100% renewable energy.

From section KRph1

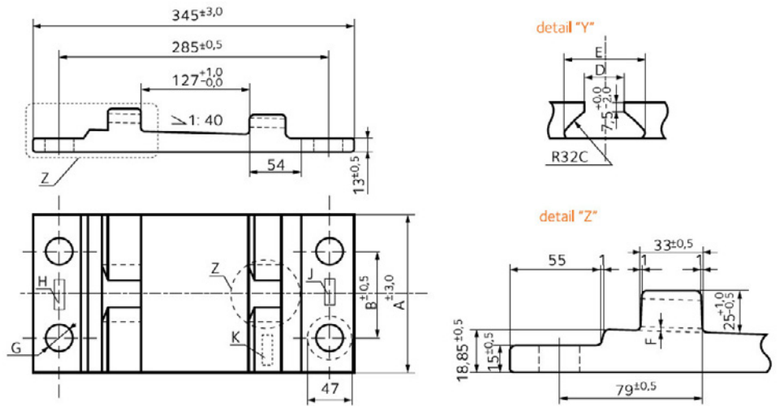

TYPE OF BASEPLATE	DIMENSIONS (mm)							THEORETICAL WEIGHT (Kg)		
	A	B	C	D	E	F	G	With 4 holes	With 2 holes	With no holes
Rph1-110-2	110	-	+1,0 -0,5	28±1,0	56,5+3,0 -0,5	0+1,0 -0,0	Ø26±0,8	-	5,28	-
RpIV-110*	110	-	+0,5 -0,0	27±0,5	56,5±1,0	0,5+1,0 -0,0	-	-	-	5,435
Rph1-140/4/25	140	80	+1,0 -0,5	28±1,0	56,5+1,5 -0,5	0+1,0 -0,0	Ø25±0,2	6,79	-	-
Rph1-150	150	90	+1,0 -0,5	28±1,0	56,5+3,0 -0,5	0+1,0 -0,0	Ø26±0,8	7,328	7,445	-
RpIV-150	150	90	+0,5 -0,0	27±0,5	56,5±1,0	0,5+1,0 -0,0	Ø24+1,0 -0,0	7,35	-	-
RpIV	160	90	+0,5 -0,0	27±0,5	56,5±1,0	0,5+1,0 -0,0	Ø24+1,0 -0,0	7,86	-	-
Rph1-160	160	90	+1,0 -0,5	28±1,0	56,5+3,0 -0,5	0+1,0 -0,0	Ø26±0,8	7,857	7,97	-
Rph1-160/2d/36	160	90	+1,0 -0,5	28±1,0	56,5+3,0 -0,5	0+1,0 -0,0	Ø36+1,0 -0,0	-	7,88	-
Rph1-160/79/2/33	160	-	+1 -0,5	28±1,0	56,5+3,0 -0,5	0+1,0 -0,0	Ø33+0,8 -0,5	-	7,89	-
Rph1-170/285x90/4/24	170	90	+1,0 -0,5	28±1,0	56,5+3,0 -0,5	0+1,0 -0,0	Ø24+1,0 -0,0	8,44	-	-
Rph1-180/26	180	90	+1,0 -0,5	28±1,0	56,5+3,0 -0,5	0+1,0 -0,0	Ø26±0,8	8,95	-	-
Rph1-210/26	210	90	+1,0 -0,5	28±1,0	56,5+3,0 -0,5	0+1,0 -0,0	Ø26±0,8	10,549	10,67	-
Rph1-210/285x150	210	150	+1,0 -0,5	28±1,0	56,5+3,0 -0,5	0+1,0 -0,0	Ø36+1,0 -0,0 Ø37+1,0 -0,0	10,35 10,31	10,56 10,55	-

*Undrilled, milled

Besides we produce

From section KRph1

Rph1/HR-160, Pzb17

RpIA-150, Rpla-160, Sph1a

Rps8A from section KRph1

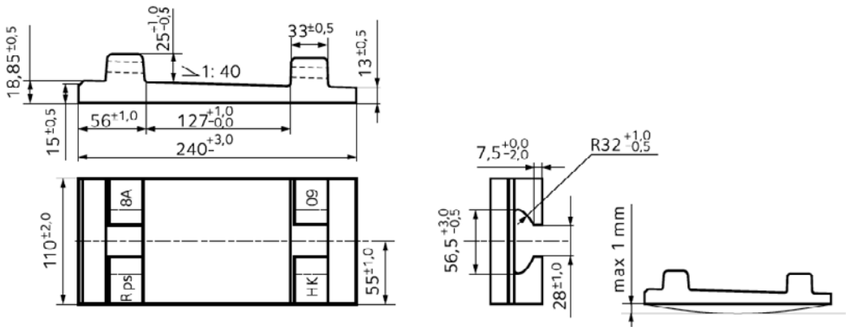

From section KRph6

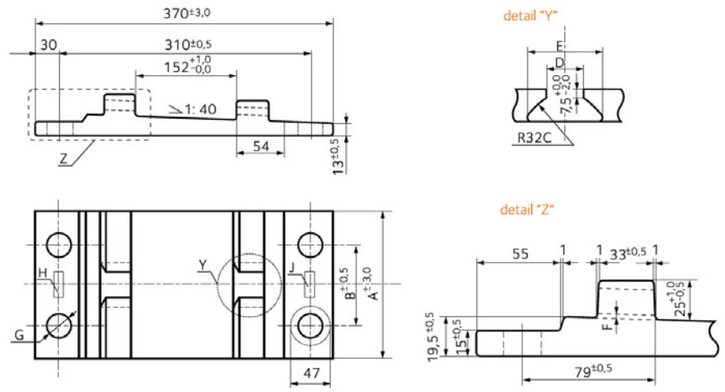

TYPE OF BASEPLATE	DIMENSIONS (mm)							THEORETICAL WEIGHT (Kg)	
	A	B	C	D	E	F	G	With 4 holes	With 2 holes
Rph6-150	150	90	0 -0,5	28±1,0	56,5+3,0 -0,5	0+1,0 -0,0	Ø26±0,8	7,88	-
Rph6-160	160	90	+1,0 -0,5	28±1,0	56,5+3,0 -0,5	0+1,0 -0,0	Ø26±0,8	8,44	8,56
RpVI	160	90	+0,5 -0,0	27±0,5	56,5±1,0	0,5+1,0 -0,0	Ø24+1,0 -0,0	8,48	-
Rph6-180/26	180	90	+1,0 -0,5	28±1,0	56,5+3,0 -0,5	0+1,0 -0,0	Ø26±0,8	9,59	9,71
Rph6-210/26	210	90	+1,0 -0,5	28±1,0	56,5+3,0 -0,5	0+1,0 -0,0	Ø26±0,8	11,316	11,433
Pm60	160	90	±0,5	28+1,0 -0,5	56,5+1,5 -1,0	0+1,0 -0,0	Ø26±0,5	8,44	-

Besides we produce

From section KRph6

Rph6/HR-160

Rpb25

Rph6-150/4/32

Rph6-150/2/32

Rph6-190/4/26

Rph6/Rus-110x265 from section KRph6

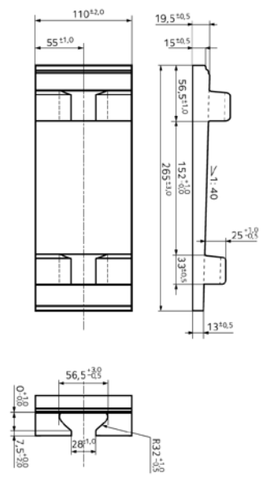

Pz60A from section KRph6

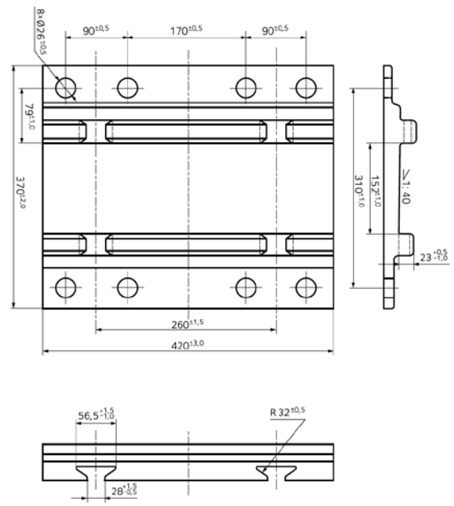

From section KRp01/01

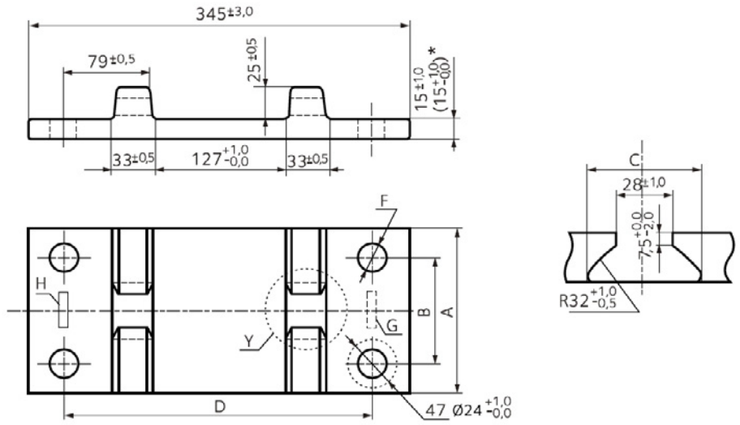

TYPE OF BASEPLATE	DIMENSIONS (mm)					THEORETICAL WEIGHT (Kg)
	A	B	C	D	F	
Rp01/01-160	160±2,0	90+0,5 -1,0	56,5+3,0 -0,5	285±1,0	Ø26±0,8	7,7
Rpb1-160	160±2,0	90+0,5 -1,0	56,5+3,5 -0,5	285±1,0	Ø26±0,8	7,7
Rp01/01-150	150±2,0	94+0,5 -1,0	56,5+3,0 -0,5	285±1,0	Ø26±0,8	7,2
Rp01/01-110	110±2,0	-	56,5+3,0 -0,5	285±1,0	Ø26±0,8	5,19
Rpb1-110	110±3,0	-	56,5+3,0 -0,5	285±1,0	Ø26±0,8	5,19
Rp01/02-160	160±2,0	94+0,5 -1,0	56,5+3,0 -0,5	-	Ø26±0,8	7,83
Rp01/01-210/285x150/4/36	210±2,0	150±0,5	56,5+3,0 -0,5	285±1,0	Ø36+1,0 -0,0	10,12
Rp01/01-140/4/25	140±3,0	80±0,5	56,5+1,5 -0,5	285±0,5	Ø25±0,2	6,67
Rp16g*	160±2,0	-	56,5+3,0 -0,5	-	-	7,357
Rp01/03-160	160±2,0	-	56,5+1,5 -0,5	-	-	7,96
Rp01/09**	160±2,0	94+0,5	56,5+1,5 -0,5	285±1,0	Ø26±0,8	7,7
BL3A	112±3,0	-	56,5+1,5 -1,0	285±1,0	Ø26±1,0	5,33

Besides we produce
From section KRp01/01
Rpb1/SBB-160
SRp1A
SRp2 (15 +1,0 -0,0)

*Undrilled, milled

**Milling axle dislocated at 25mm

BL3A from section KRp01/01

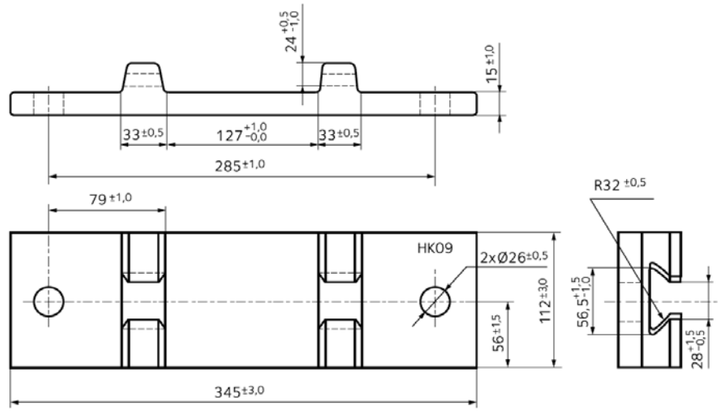

Pm49 from section KPZ5

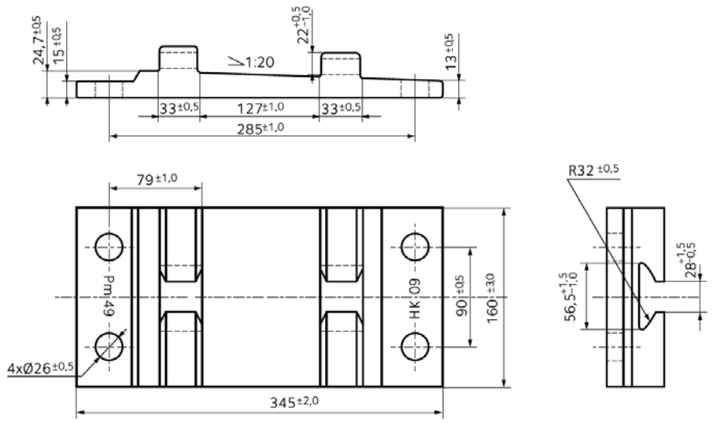

Ps49A from section KRpo21

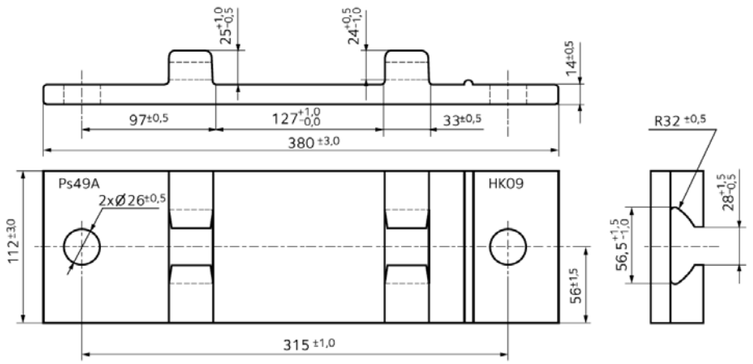

Ps60-112 from section KPZ3

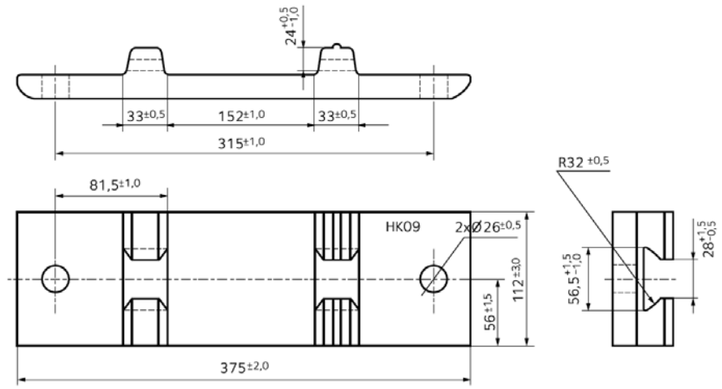

PT180-160 from section KPT180

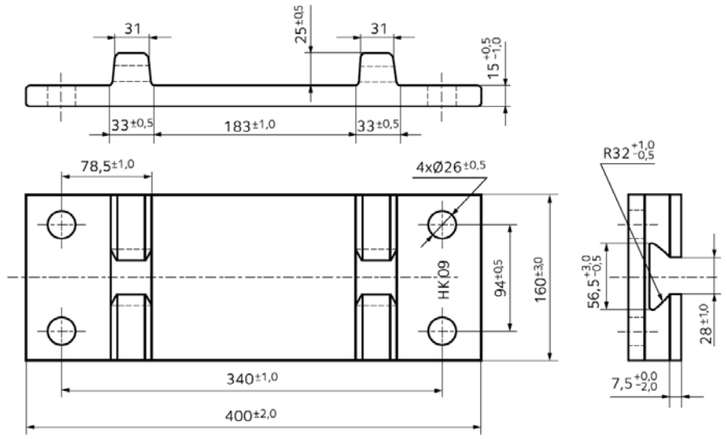

Besides we produce	
PT180-110/2/26, PT180-110/2/28	PT180-140/2/34, PT180-140/6/26
PT180-110/2/36, PT180-110/2/37	PT180-140/4/26, PT180-150/4/24
PT180-115, PT180-130, PT180-140/2/26	PT180-150/4/26, PT180-160/2/26

Pza16 from section KPZ3

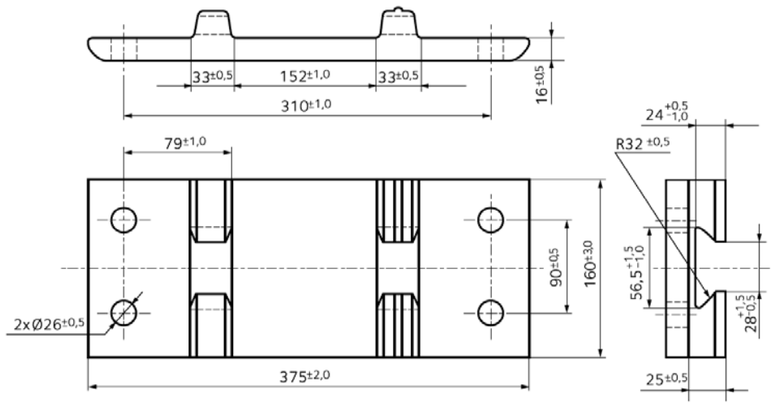

Pzb16A from section KRp01/01

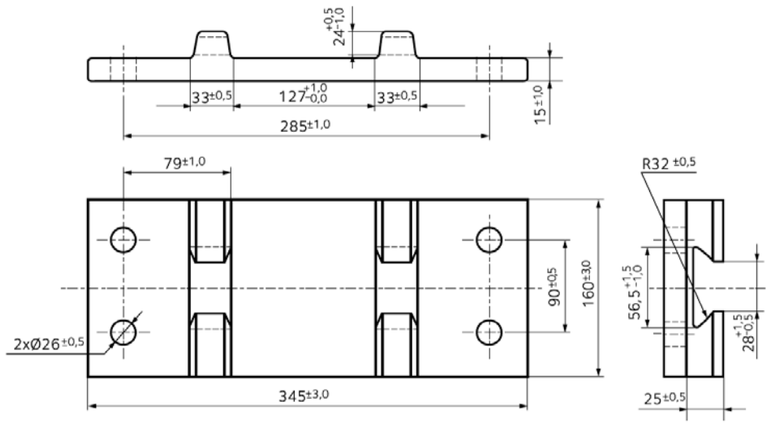

Besides we produce	
From section KPZ3	From section KPZ3 thickness 20 mm
Pža18A	Pža16-20
Ps60-160/HR	Ps60-20/112/2/26
Ps60-150/4/25	Ps60-20/160/4/24
Ps60-180/4/25	Ps60-20/160/2/28
Ps60-210/4/26	Ps60-20/160/4/26
	Ps60-20/180
From section KPZ5	From section KRpo21
Pm49-140/HR	Rpo21a, Rpo21f, Rpo21b
Rpl-150, Rpl-110 n/o-,fr	
Rpo5e	
RplVx	

Rpl-20/4 from section KRp01/01B

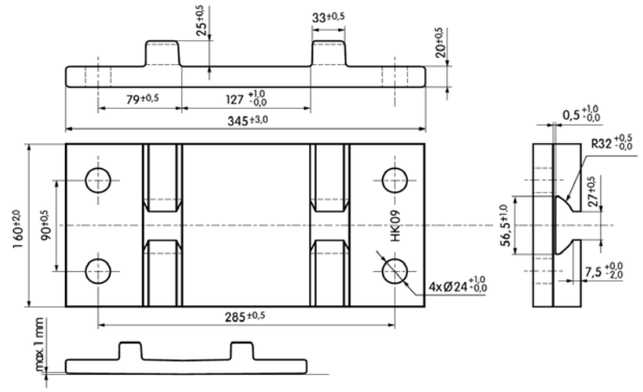

Pz49A from section KPZ5

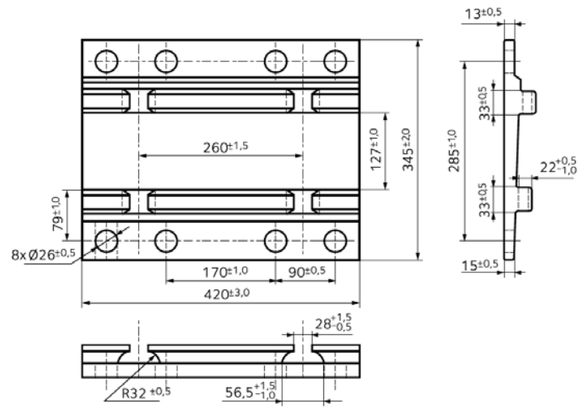

P39 from section KP39

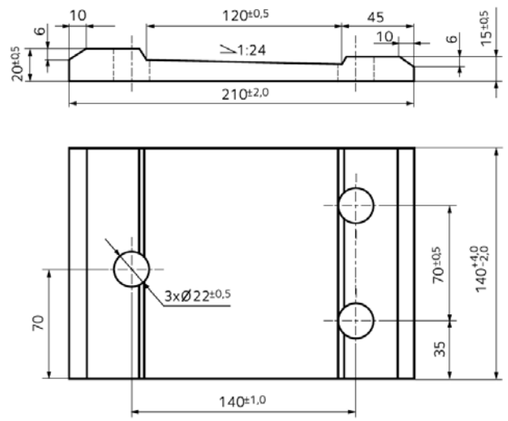

Pzb18B from section KRp01/01

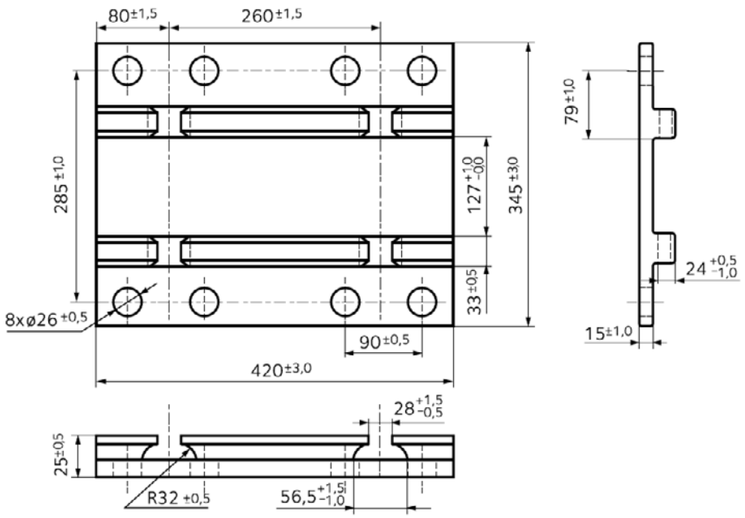

Type Pandrol

Pandrol 140

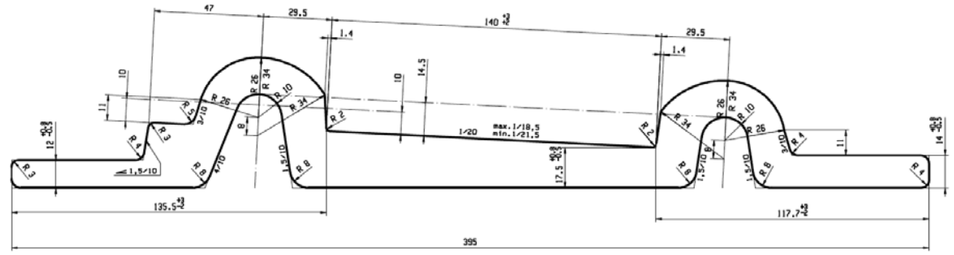

Pandrol 140 dimension B 395 mm.

Tilted Pandrol fastening 1/20
For flange rails of 140 mm.

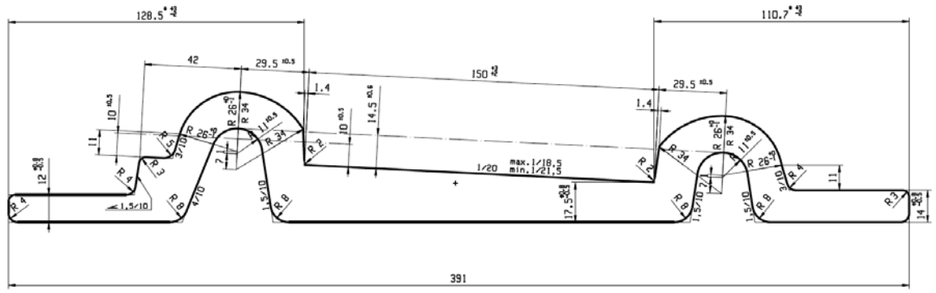

Pandrol150 dimension B 391mm.

Tilted Pandrol fastening 1/20
For flange rails of 150 mm.

* To guarantee the functionality of the product at the joint moment, there is a tolerance of +6 -2.

Inclined

Pl 140-1/20

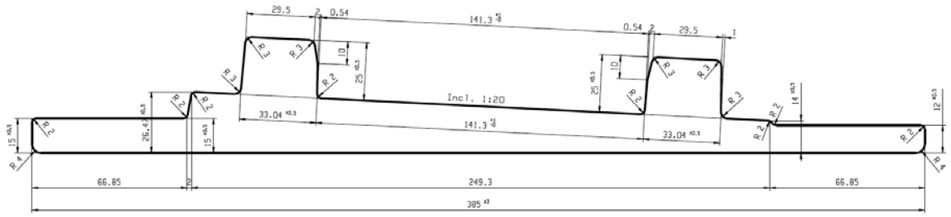

Flat inclined "GEO" 1/20 - 66,71 kg/m.
For rails of 50 kg
Flange rails of 140 mm.

Pl 150-1/20

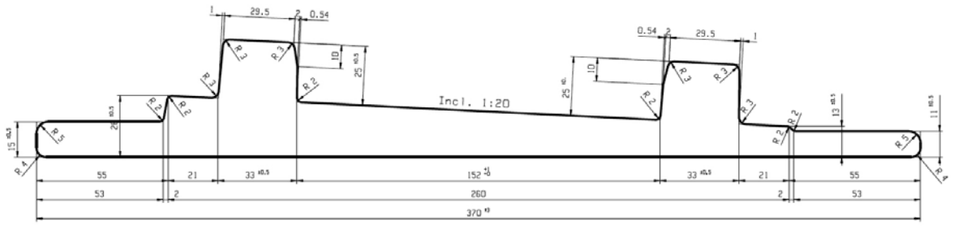

Flat inclined "GEO" 1/20 - 57.5 kg/m.
Flange rails of 150 mm.

Pl 150-1/40A

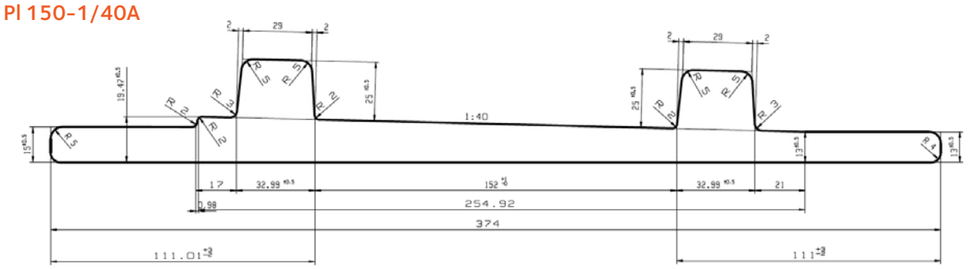

Flat inclined "GEO" 1/40 - 57.5 kg/m.
Flange rails of 150 mm.

Pl 150-1/40B

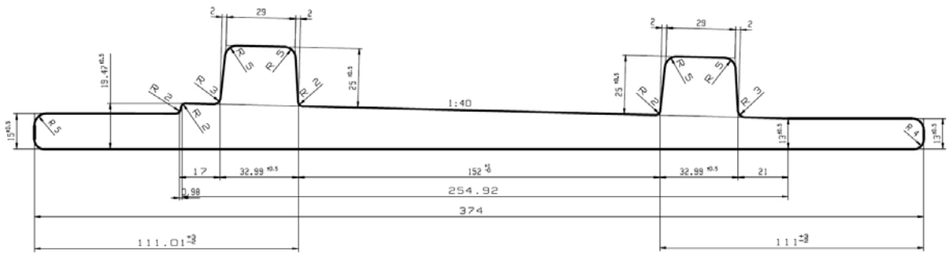

Flat inclined "GEO" 1/40 - 69,2 kg/m.
Flange rails of 150 mm.

Standard

PP 140-t14

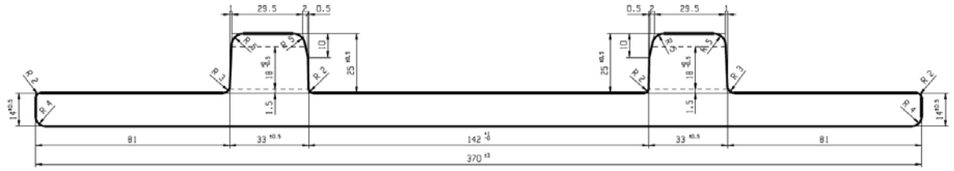

Flat plate "GEO" - 53 kg/m.
Flange rails of 140 mm.

PP 140-t15

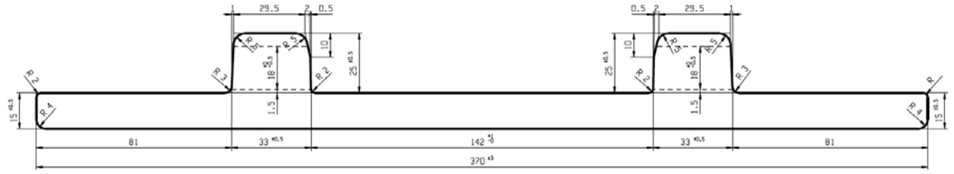

Flat plate "GEO" - 55,84 kg/m.
Flange rails of 140 mm.

PP 140-t16

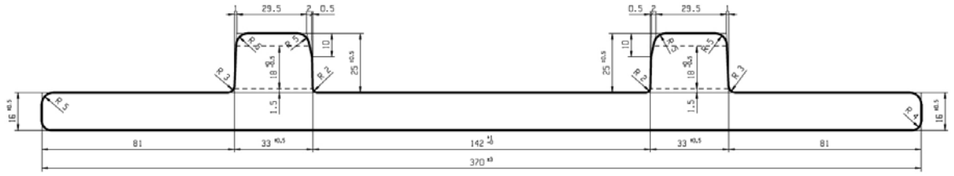

Flat plate "GEO" - 59,0 kg/m.
Flange rails of 140 mm.

PP 140-t20

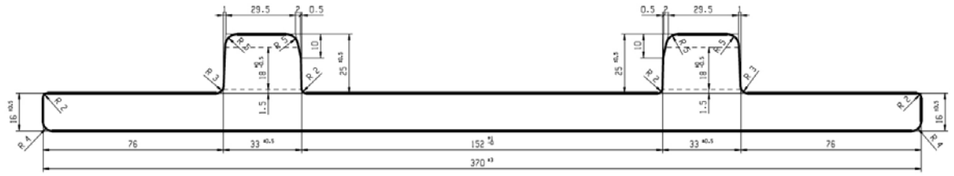

Flat plate "GEO" - 70,294 kg/m.
For rails of 50 kg.
Flange rails of 140 mm.

- Steel grade as per the request of the customer.
- All variations upon request and subject to final acceptance of the mill.
- Delivery of all tie-plate profiles in lengths up to 24m possible. For lengths > 24m, please contact the technical department.
- All tie-plate profiles can be delivered as finished product ready for use (cut, drilled) based on the specifications of the customer.

Standard

PP 150-t15

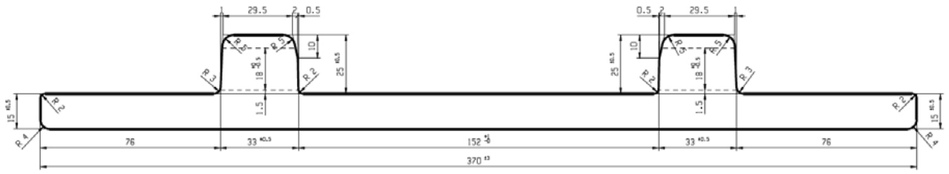

Flat plate "GEO" - 55,84 kg/m.
Flange rails of 150 mm.

PP 150-t16

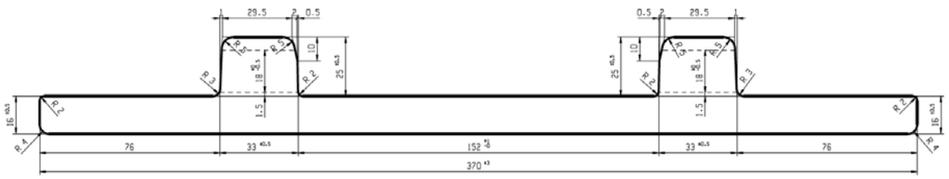

Flat plate "GEO" - 59 kg/m.
Flange rails of 150 mm.

PP 150-t20

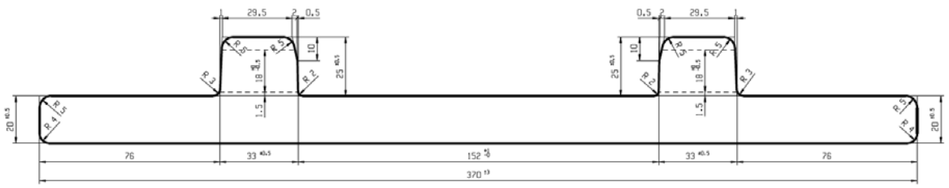

Flat plate "GEO" - 70,294 kg/m.
Flange rails of 150 mm.

- Steel grade as per the request of the customer.
- All variations upon request and subject to final acceptance of the mill.
- Delivery of all tie-plate profiles in lengths up to 24m possible. For lengths › 24m, please contact the technical department.
- All tie-plate profiles can be delivered as finished product ready for use (cut, drilled) based on the specifications of the customer.

Ł p2

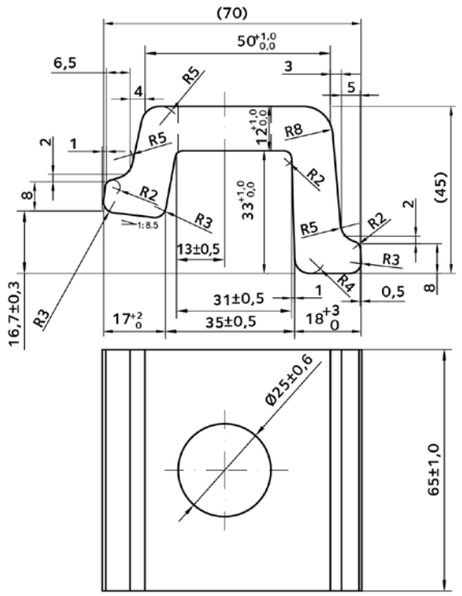

Ł p3

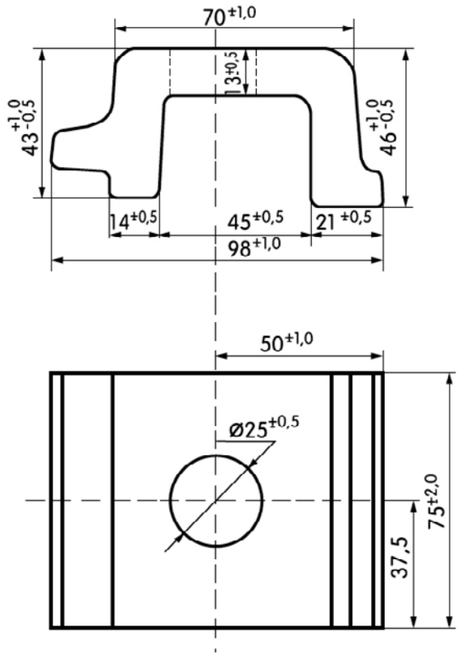

Ł p5

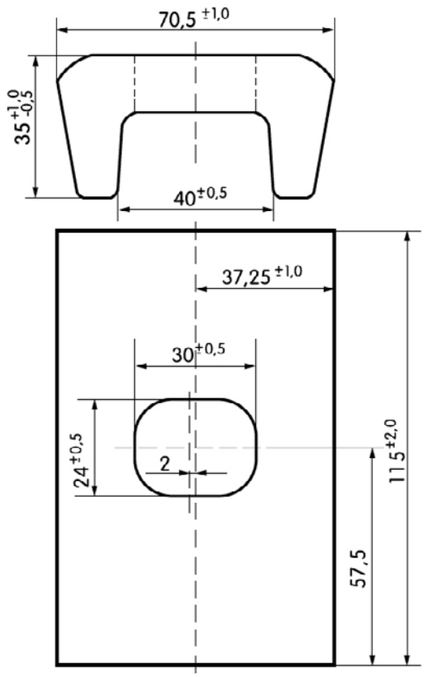

Кро6

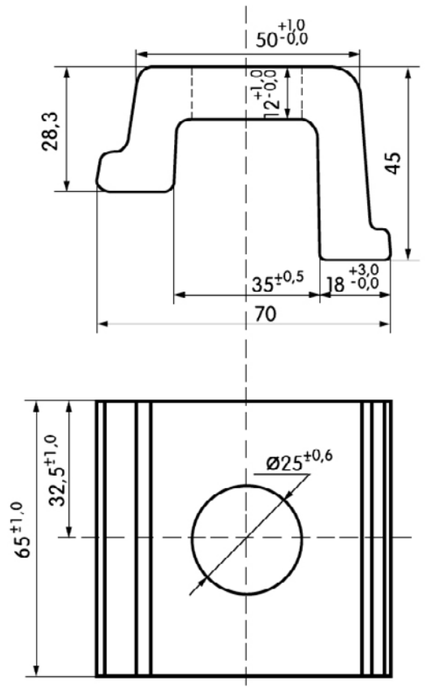

Fl 14c

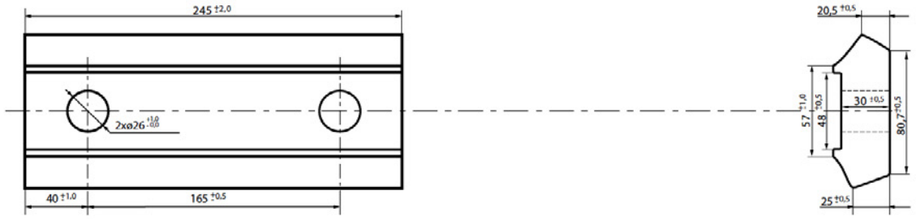

Fl 14a

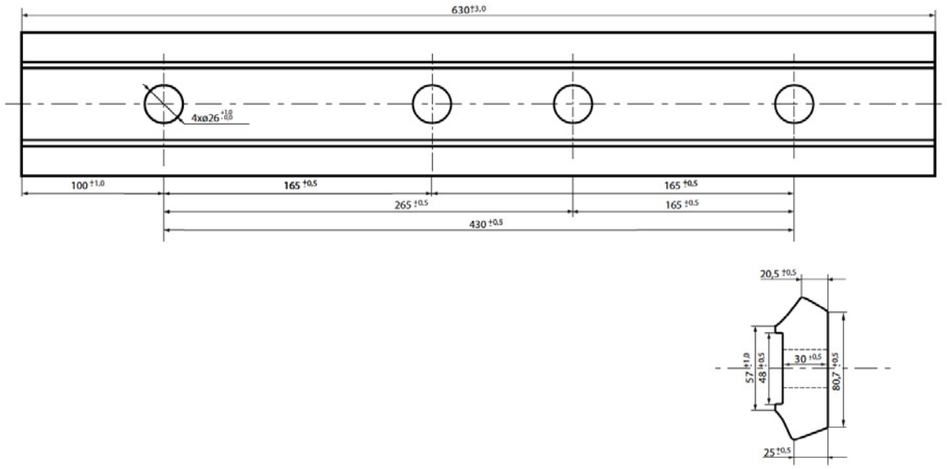

Fl 30

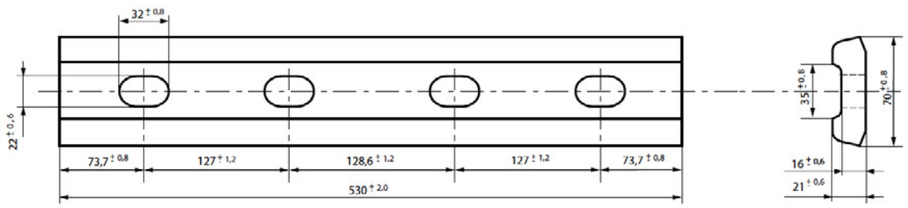

Ł 49

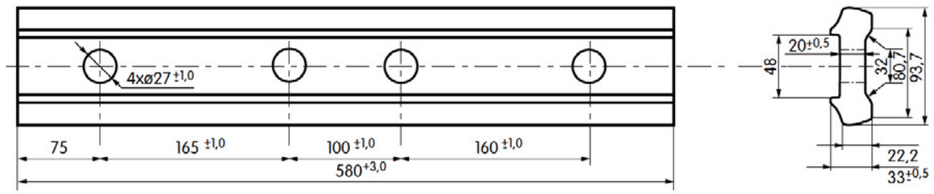

As well as £49/26 (4x ø26 +1,0 -0,0) and / y £49/HR (4x ø26 +0,5 -)

Ł 49-900/6

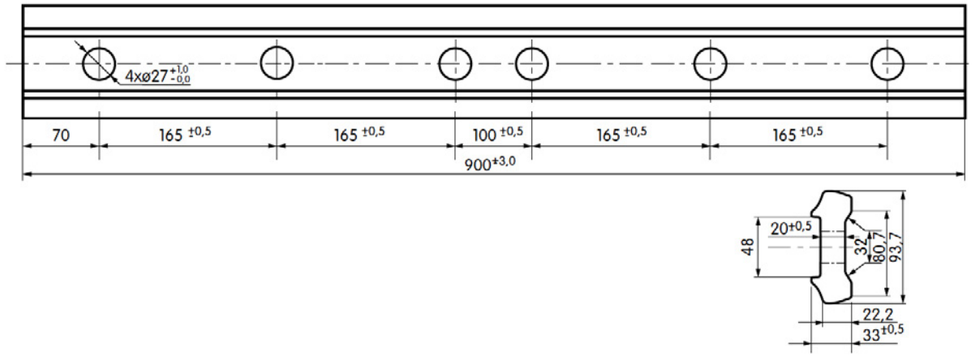

Ł 49d

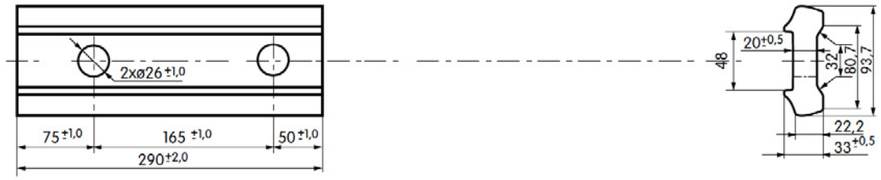

Ł 49d-263

Ł 39

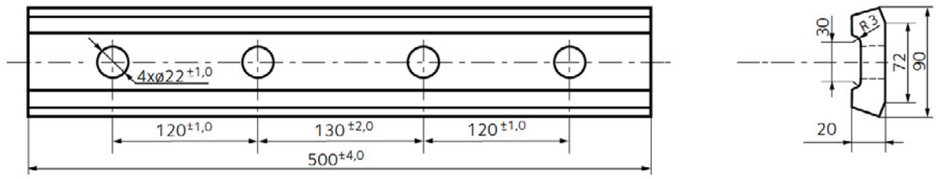

Ł 49-545/28

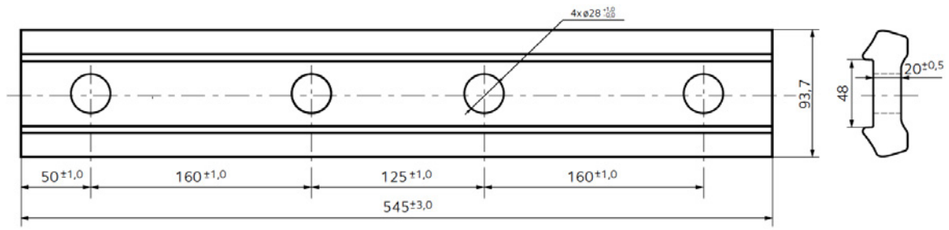

C.C.332

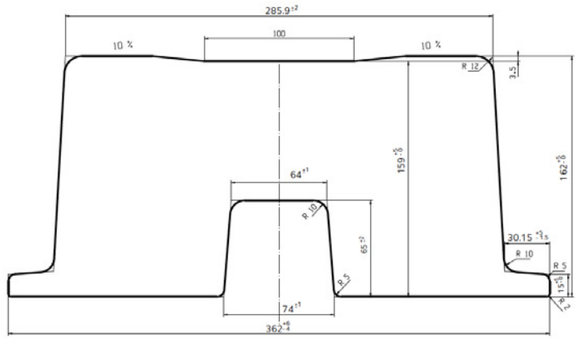

C.C. 379

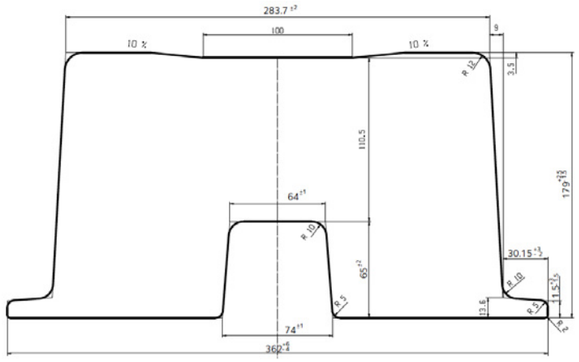

C.C. 397

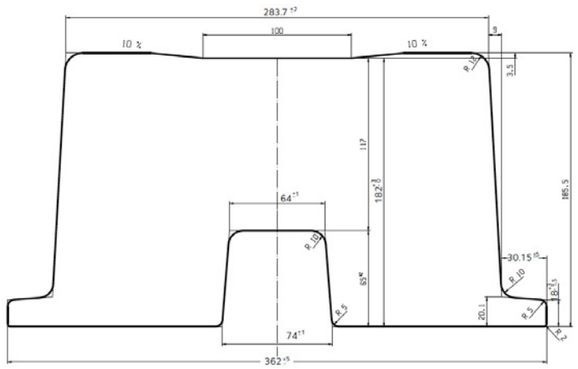

CC332, CC 379 and CC 397
*steel grades as per request.
*lenghts as per request.

Used to build cross sections between rails.

Angle of the guide and of the outlet

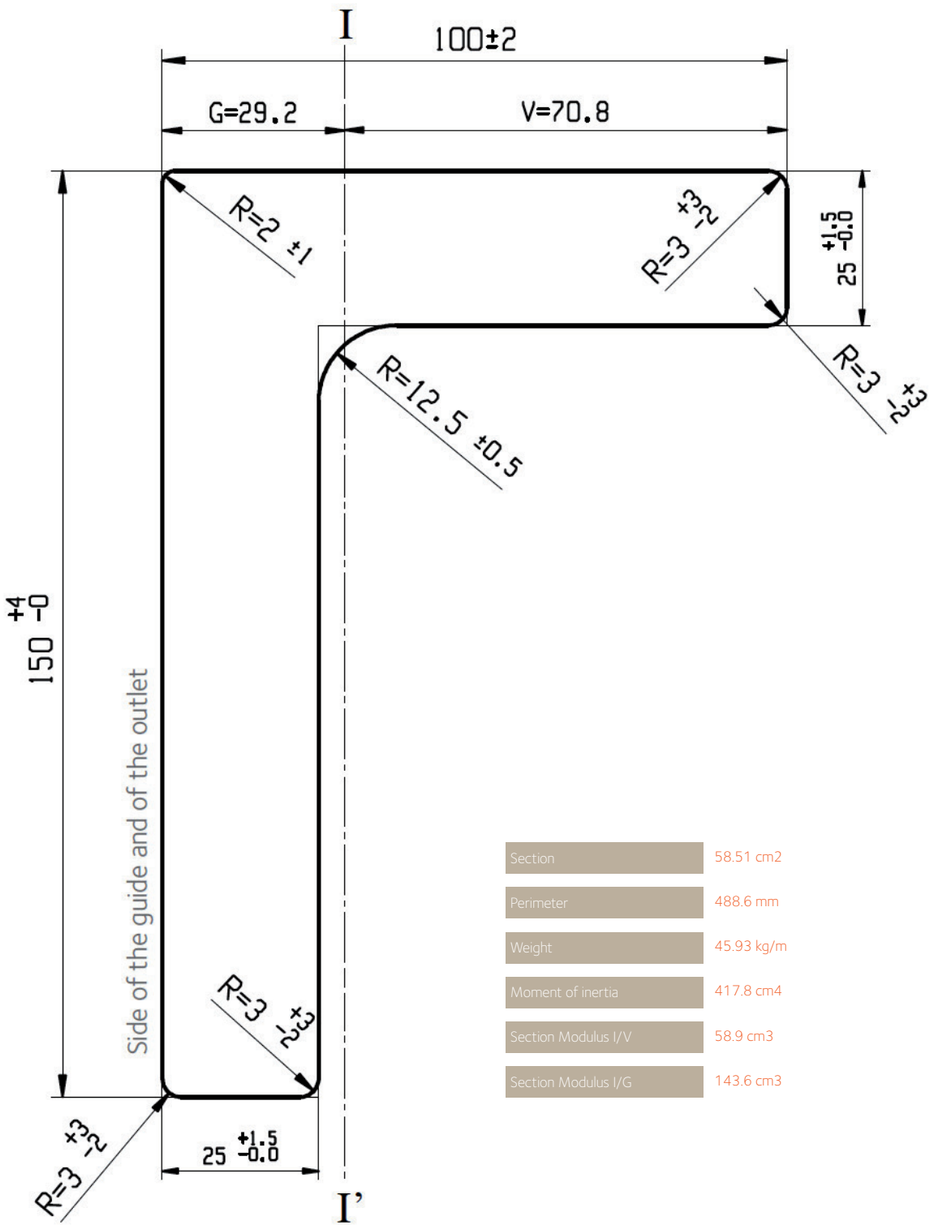

Section	58.51 cm2
Perimeter	488.6 mm
Weight	45.93 kg/m
Moment of inertia	417.8 cm4
Section Modulus I/V	58.9 cm3
Section Modulus I/G	143.6 cm3

Bar dimensions 150 x 100 x 25 mm Weight: 45,93 kg/m.
Steel grade: S235J0 according to EN 10025.
Used in the construction of metro lines to limit the lateral movements of the wagons and to enable the current flow.

UIC54-170
produced from section type KUIC54

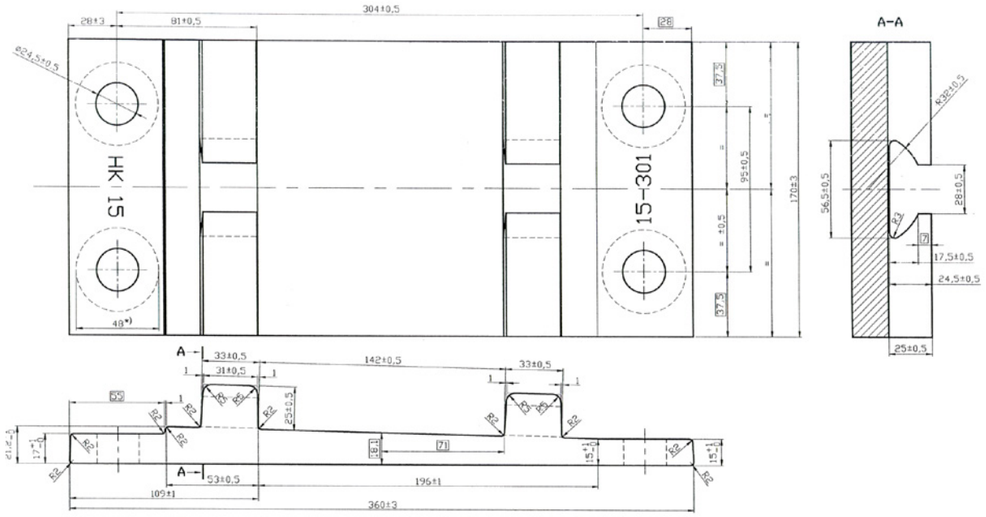

54E1-160
produced from section type 54E1

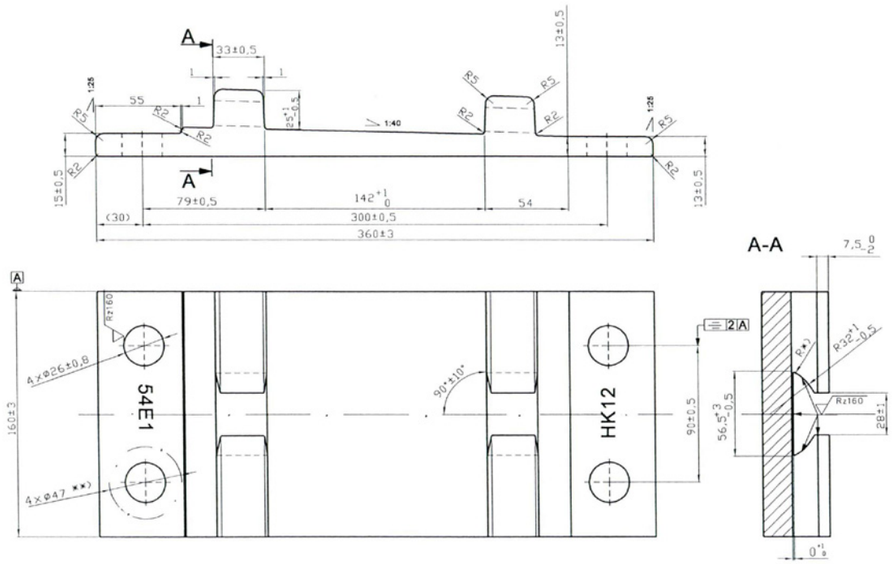

Ł60W4
produced from section type KŁ60W

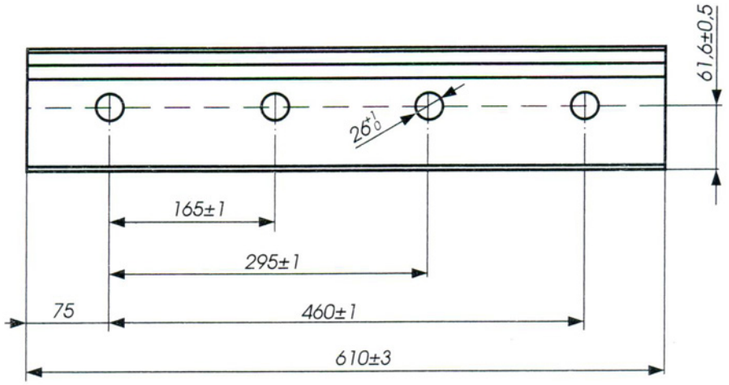

Ł60W6
produced from section type KŁ60W

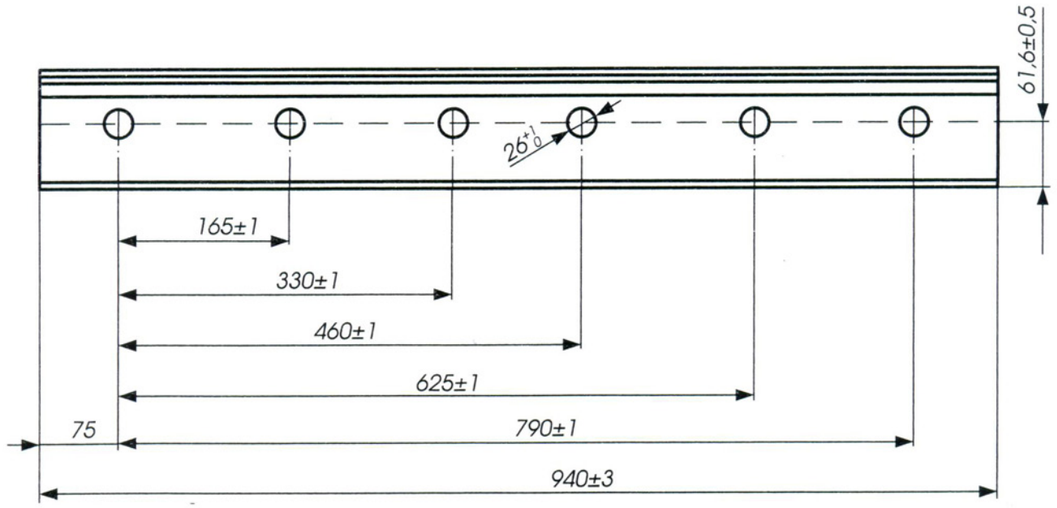

Ł49W4
produced from section type KŁ60W

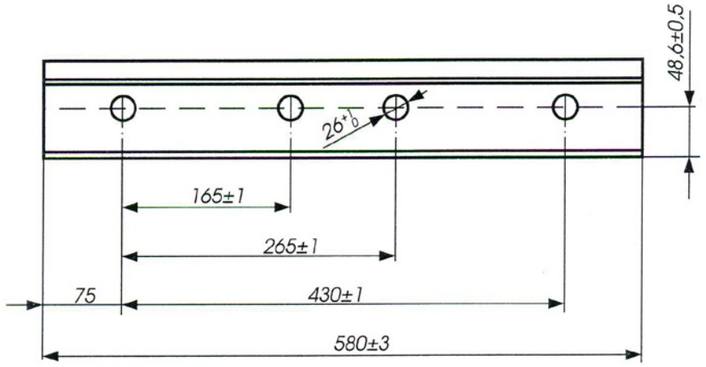

Ł60W6
produced from section type KŁ60W

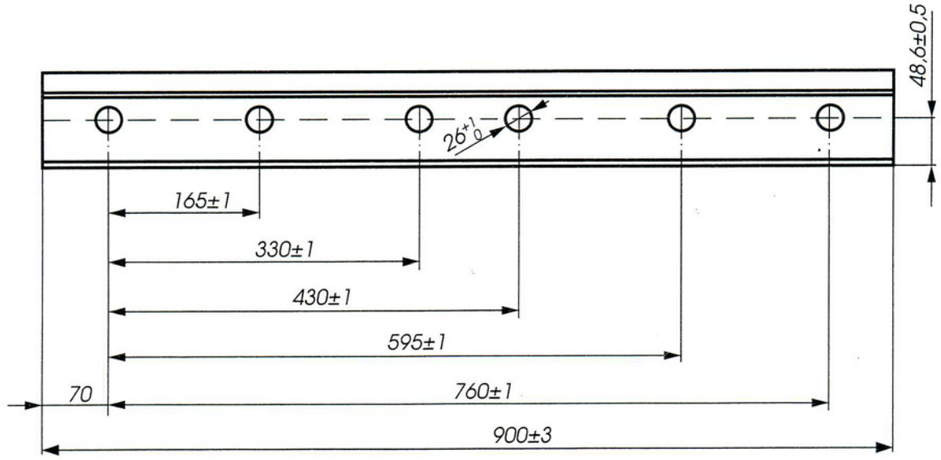

Ł60WS4
produced from section type KŁ60WS

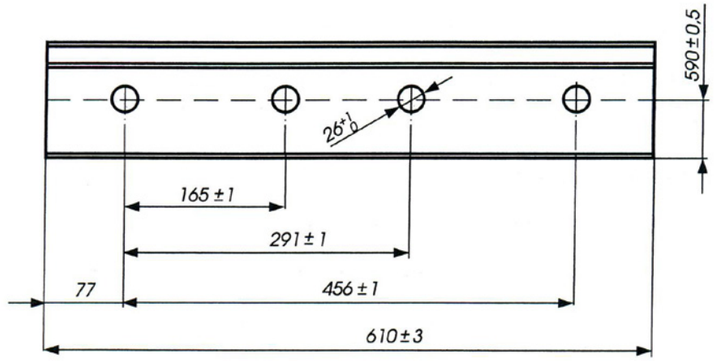

Ł60WS6
produced from section type KŁ60WS

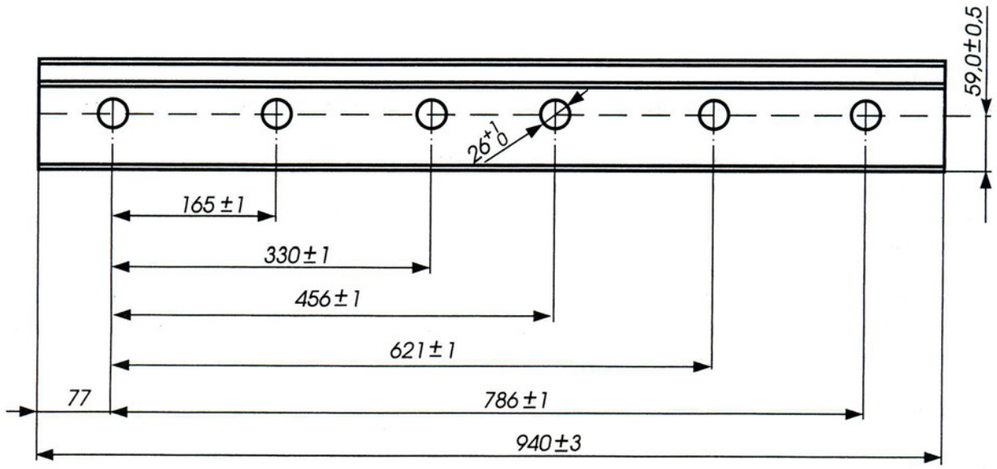

Strengthened fishplates

Ł49WS4
produced from section type KŁ49W

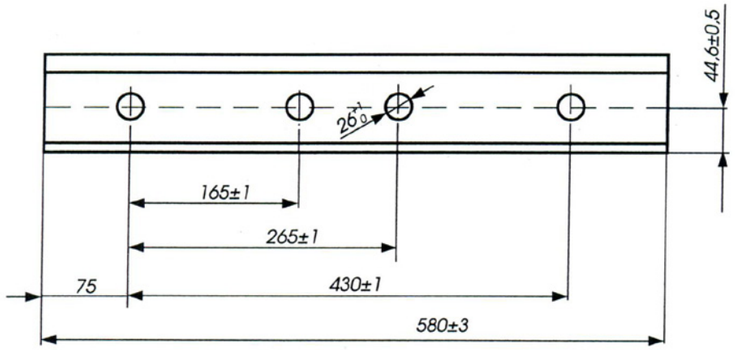

Ł49WS6
produced from section type KŁ49W

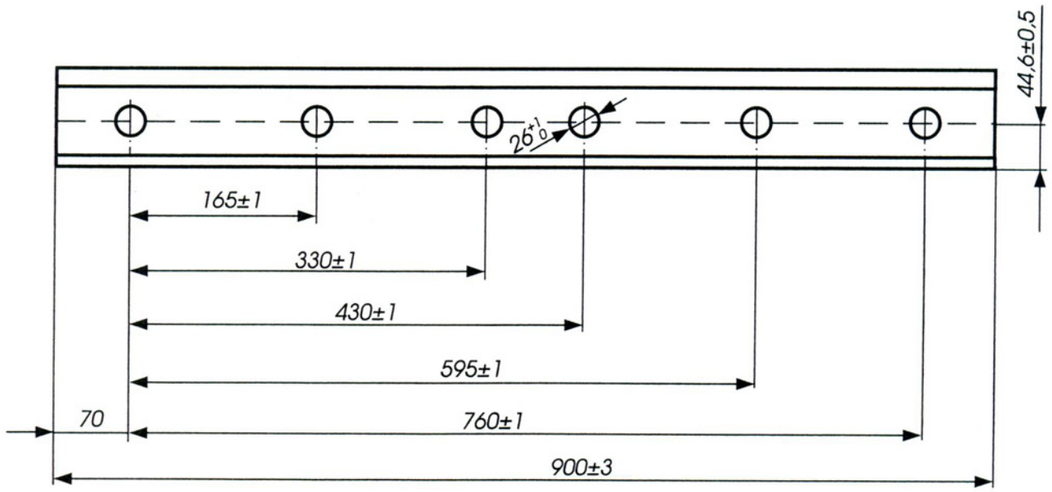


Ribbed baseplates


Tie plates


Clamps

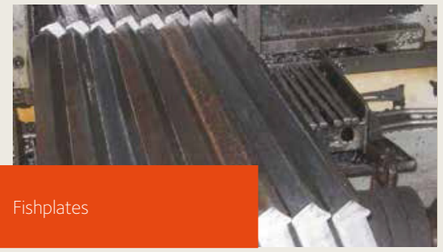
Fishplates


Frog profile


Metro guide bar

Quality products and service

The high quality of our rails, linked with awarded customer quality certificates and homologations (for example DB in Germany and DEKRA Rail in the Netherlands), are the reasons for which our products have experienced an important increase in the global market in the recent years with worldwide sales.

ArcelorMittal Rails quality policy is focused on ensuring our customers the quality of our products supply, adapted specifically to their needs. Our quality assurance system policy is intended for the production of rail and rendering of services according to the changing needs of our customers, in order to meet or exceed their expectations.

Customer satisfaction is our main objective and the prevailing condition for permanent success of our rail facilities and product reliability

ArcelorMittal Global R&D

ArcelorMittal is leader in all major global steel markets, with leading R&D dedicated centers. Rail manufacturing at ArcelorMittal is supported by Global R&D Rail Competence Centre located in Aviles, Spain and supported by ArcelorMittal Global R&D network, where continuous improvement in railway systems engineering and research takes place.

Additional information can be found on:
rails.arcelormittal.com
2021

ArcelorMittal Commercial Long Poland
Sales | Rails | Al. Piłsudskiego 92
41-308 Dabrowa Górnicza, Poland
halina.krawczyk@arcelormittal.com
Tel: +48 327 767 996
rails.specialsections@arcelormittal.com

ArcelorMittal Commercial Sections
Sales | Special Sections | 66, Rue de Luxembourg
L-4221 Esch sur Alzette | G.D. of Luxembourg
rails.specialsections@arcelormittal.com

rails.arcelormittal.com